Liquid Freezer II 280 RGB with controller

P/N: ACFRE00107A
Scale 1:2
Rev. Date: 2022-11-07

Radiator and Fans

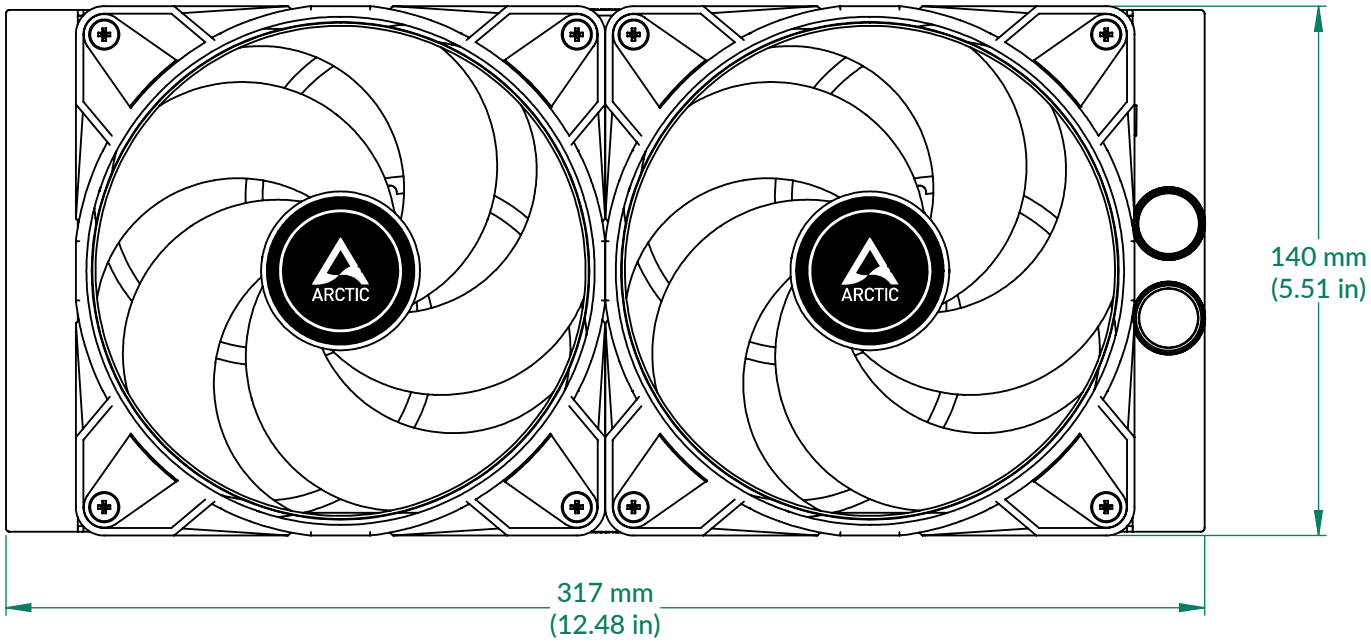

Front View

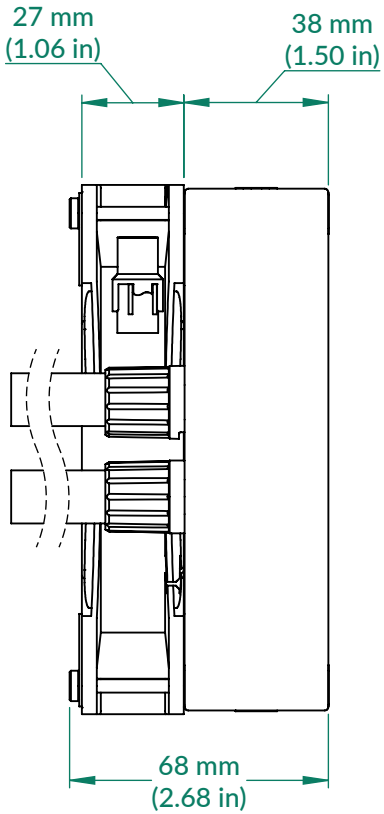

Side View

© 2022 ARCTIC (HK) Ltd. All rights reserved.

Liquid Freezer II Series

Scale 1:1
Rev. Date: 2022-11-07

Pump/Cold Plate

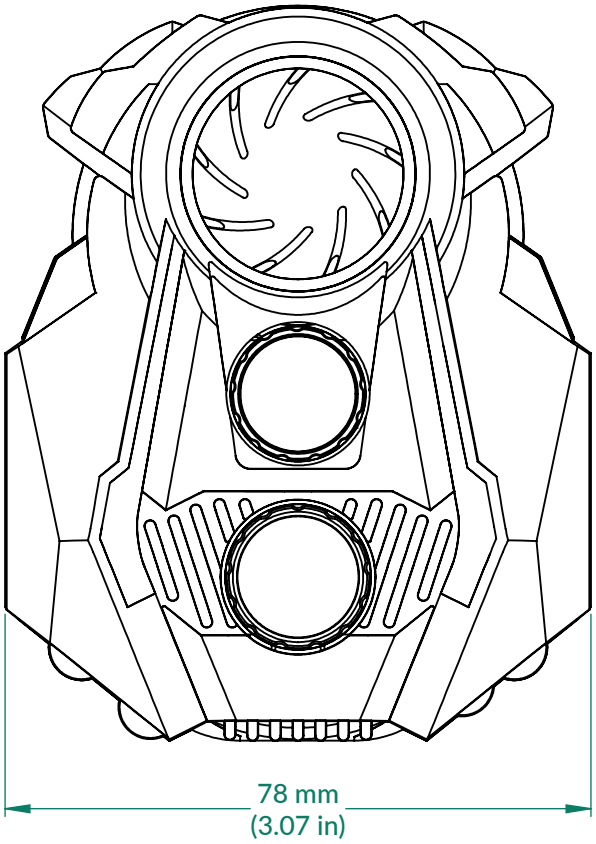

Front View

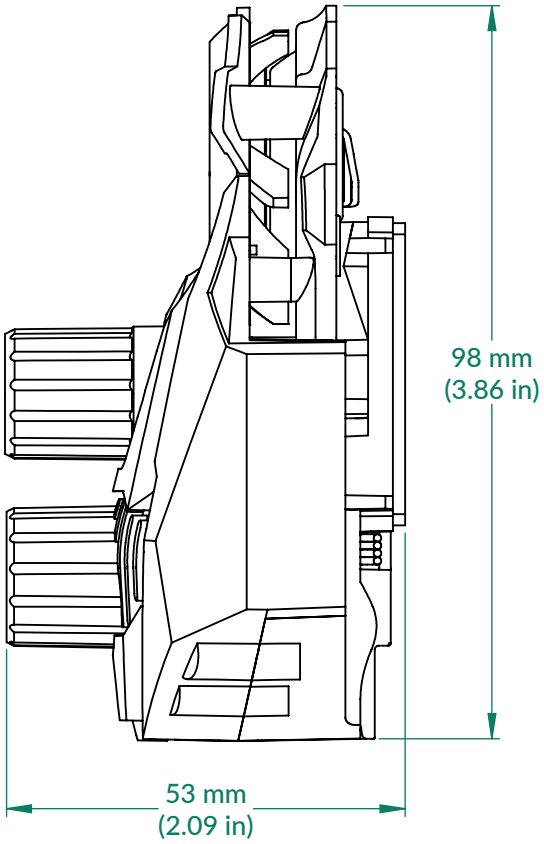

Side View

© 2022 ARCTIC (HK) Ltd. All rights reserved.

Liquid Freezer II Series

Scale 1:1
Rev. Date: 2022-11-07

RGB Controller

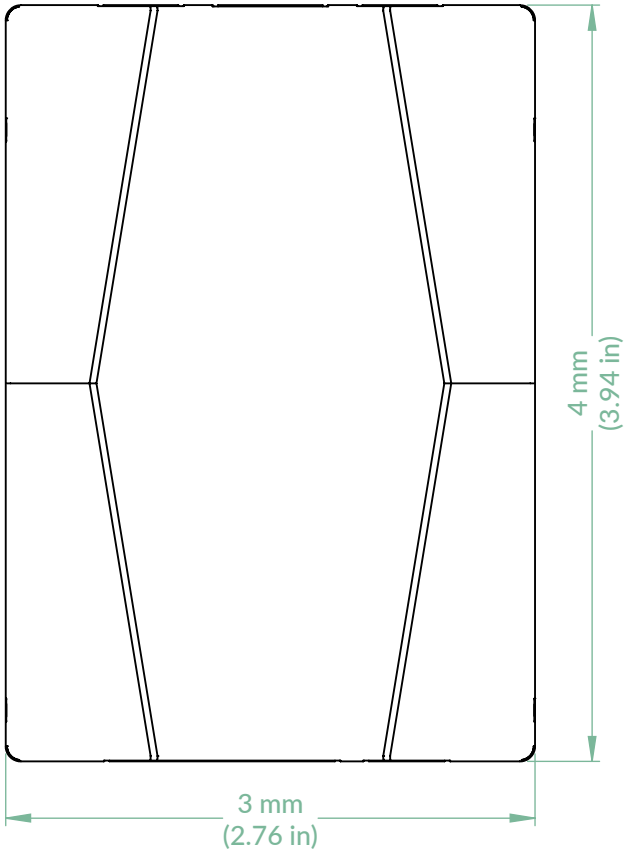

Front View

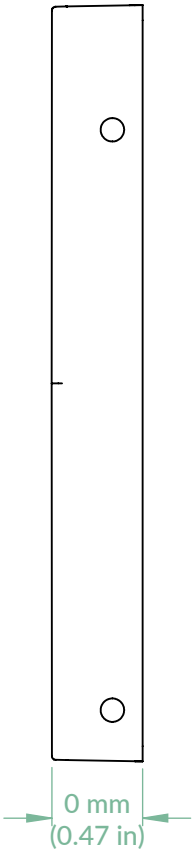

Side View

© 2022 ARCTIC (HK) Ltd. All rights reserved.